Summary in Graph

Exam Summary (GO Classes CS Test Series 2026 | Digital Logic | Subject Wise Test 3)

Qs. Attempted:	0 (0 + 0)	Correct Marks:	0 (0 + 0)
Correct Attempts:	0 (0 + 0)	Penalty Marks:	0 (0 + 0)
Incorrect Attempts:	0 (0 + 0)	Resultant Marks:	0 (0 + 0)

Total Questions:	25 (5 + 20)
Total Marks:	45 (5 + 40)
Exam Duration:	75 Minutes
Time Taken:	0 Minutes

Individual Question Statistics

Select Metric: Marks Obtained

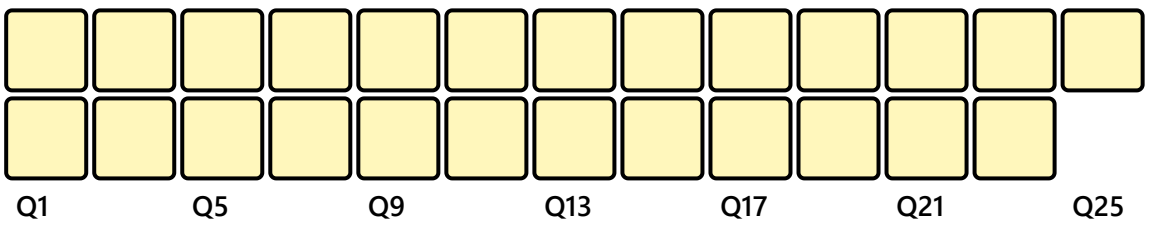

* Average Stats based on first-attempt stats of Top 10% (14) out of 144 users

EXAM RESPONSE EXAM STATS FEEDBACK

Technical

Q #1 Numerical Type Award: 1 Penalty: 0 Digital Logic

A number N is represented in excess-31 code using 6 bits. The binary representation stored is 101011. Find the decimal value of N.

Your Answer: Correct Answer: 12 Not Attempted Time taken: 00min 00sec Discuss

Q #2 Multiple Choice Type Award: 1 Penalty: 0.33 Digital Logic

Select the alternative that presents the simplification, using Karnaugh's Map, of the function whose expression in canonical terms is $f(x,y,z) = \sum_3 m(3,5,6)$.

A. $f(x,y,z) = xyz + xy\bar{z} + x\overline{yz}$

B. $f(x,y,z) = x\bar{y}\bar{z} + \overline{xy}z + xy\bar{z}$

C. $f(x,y,z) = xyz + xy\bar{z} + \bar{x}\bar{y}z$

D. $f(x,y,z) = \bar{x}\bar{y}\bar{n}^{-} + x\bar{y}\bar{n} + \bar{x}\bar{y}$

Your Answer: Correct Answer: B Not Attempted Time taken: 00min 00sec Discuss

Q #3 Multiple Choice Type Award: 1 Penalty: 0.33 Digital Logic

Simplify using Karnaugh the function whose expression, in canonical terms, is:

$$f(x,y,z) = \sum m(2,5,6)$$

A. $f(x,y,z) = \bar{x}y\bar{z} + x\bar{y}z + xy\bar{z}$

B. $f(x,y,z) = y\bar{z} + x\bar{y}z$

C. $f(x,y,z) = \bar{x}yz + x\bar{y}z + xy\bar{z}$

D. $f(x,y,z) = \bar{z} + x\bar{y}$

Your Answer: Correct Answer: A Not Attempted Time taken: 00min 00sec Discuss

Q #4 Multiple Choice Type Award: 1 Penalty: 0.33 Digital Logic

The complement of $X + Y \cdot Z$

A. $\bar{X} + \bar{Y} \cdot \bar{Z}$

B. $\bar{X} \cdot \bar{Y} + \bar{Z}$

C. $\bar{X} \cdot (\overline{Y} + \bar{Z})$

D. $\bar{X} \cdot \bar{Y} \cdot \bar{Z}$

Your Answer: Correct Answer: C Not Attempted Time taken: 00min 00sec Discuss

Q #5 Multiple Choice Type Award: 1 Penalty: 0.33 Digital Logic

A circuit consists of a 2-input NAND gate followed by a 2-input NOR gate. The inputs to the NAND gate are P and Q. The output of the NAND gate and a third variable R are the inputs to the NOR gate.

The final output of the NOR gate is logically equivalent to which of the following?

A. $(P+Q)\cdot\bar{R}$

B. $P\cdot Q\cdot\bar{R}$

C. $(\bar{P}+\bar{Q})\cdot R$

D. $\bar{P}\cdot\bar{Q}\cdot R$

Your Answer: | Correct Answer: B | Not Attempted | Time taken: 00min 00sec | Discuss

Q #6 | Multiple Select Type | Award: 2 | Penalty: 0 | Digital Logic

Analyze the following statements about the figure below:

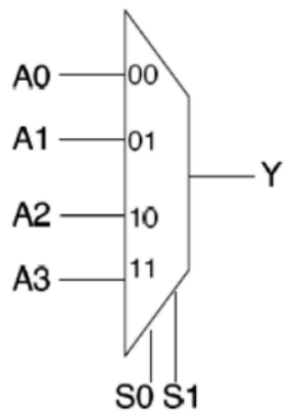

I. The figure represents the logic symbol of a $4:1$ multiplexer.
II. An $8:1$ multiplexer can be composed of two $4:1$ multiplexers and one $2:1$ multiplexer.
III. The output Y of the multiplexer shown in the figure receives AO when $\mathrm{S0}=0$ and $\mathrm{S1}=1$.
IV. The multiplexer shown in the figure can be implemented with four 3-input NAND logic gates, one 4-input NAND logic gate, and two inverters.
V. The multiplexer shown in the figure can implement any Boolean function with 2 inputs: SO and $\mathrm{S1}$.

Which are correct?

A. I and II.

B. III and IV.

C. II, IV , and V.

D. I, II, IV, and V.

Your Answer: | Correct Answer: A,C,D | Not Attempted | Time taken: 00min 00sec | Discuss

Q #7 | Multiple Choice Type | Award: 2 | Penalty: 0.67 | Digital Logic

Select the alternative that presents the simplified expression equivalent to the logic circuit below:

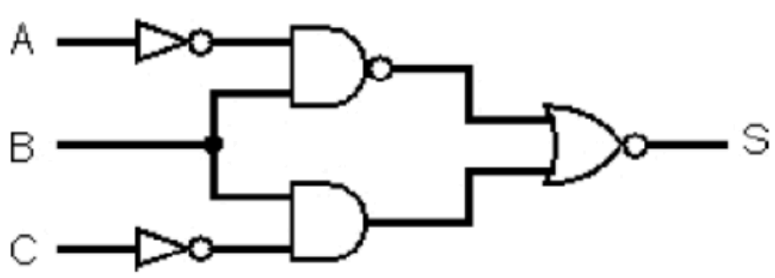

A. $S=\overline{ABC}$

B. $S = ABC$

C. $S = AB\bar{C}$

D. $S = \overline{AB}\bar{C}$

Your Answer: | Correct Answer: A | Not Attempted | Time taken: 00min 00sec | Discuss

Q #8 Multiple Choice Type | Award: 2 | Penalty: 0.67 | Digital Logic

Consider a logic circuit with three inputs, A, B, C, and one output S. Considering that the value of output S is equal to the value of input A when inputs B and C are at the same logic level, and that the value of output S is equal to the inverse of the value of input A when inputs B and C are at opposite logic levels, select the option that presents the logic expression corresponding to the circuit.

A. $S = A \cdot B \oplus C$

B. $S = \bar{A} \oplus B \oplus C$

C. $S = A \oplus \overline{B \oplus C}$

D. $S = A \oplus B \oplus C$

Your Answer: | Correct Answer: D | Not Attempted | Time taken: 00min 00sec | Discuss

Q #9 Multiple Choice Type | Award: 2 | Penalty: 0.67 | Digital Logic

Consider the synchronous counter in the figure below. Given that the binary values of the counter outputs are $Q_2 = 0$; $Q_1 = 1$ and $Q_0 = 0$, select the alternative that contains the binary value of outputs Q_2, Q_1, and Q_0 after the next clock signal pulse.
NOTE: A black dot at a line intersection represents a connection.

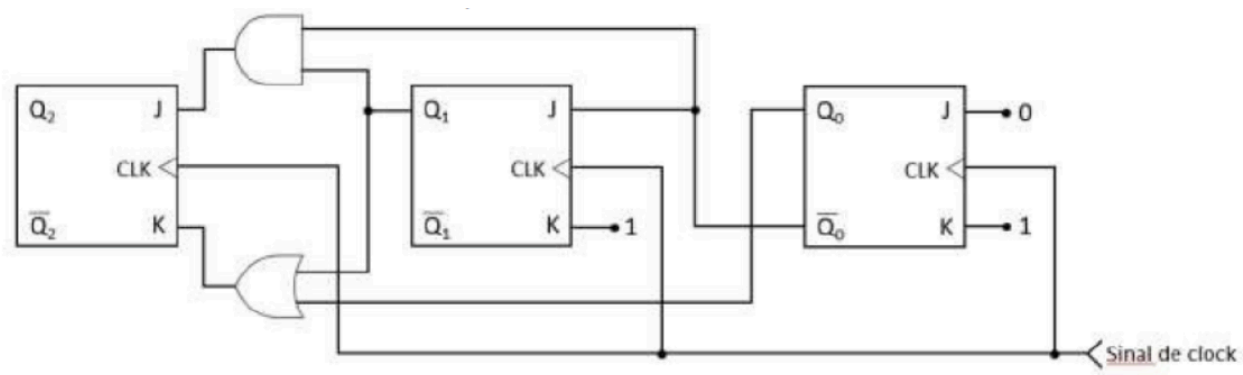

A. $Q_2 = 0; Q_1 = 0; Q_0 = 0.$

B. $q_2 = 0; q_1 = 0; q_0 = 1.$

C. $Q_2 = O; q_1 = 1; q_2 = 1.$

D. $Q_2 = 1; q_1 = 0; q_0 = 0.$

Your Answer: | Correct Answer: D | Not Attempted | Time taken: 00min 00sec | Discuss

Q #10 Multiple Choice Type | Award: 2 | Penalty: 0.67 | Digital Logic

Consider the digital circuit below

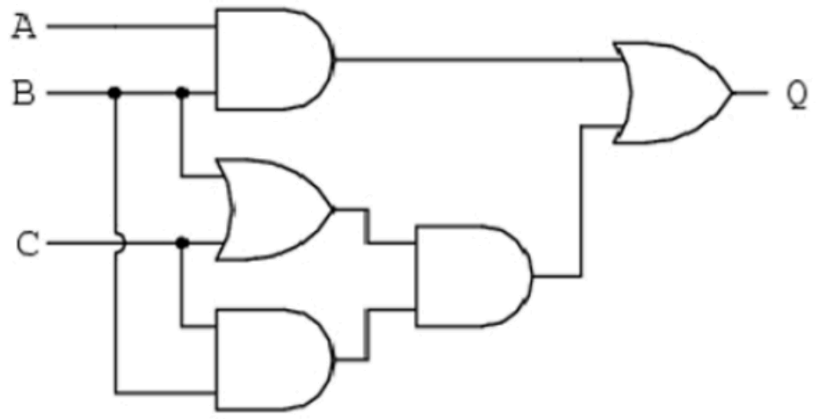

What is the value of Q ?

A. $A + BC$

B. $B(A + B + C)$

C. $C(A + B)$

D. $B(A + C)$

Your Answer: | Correct Answer: D | Not Attempted | Time taken: 00min 00sec | Discuss

Q #11 | Multiple Choice Type | Award: 2 | Penalty: 0.67 | Digital Logic

Given the truth table below:

A	B	C	X
0	0	0	0
0	0	1	0
0	1	0	0
0	1	1	1
1	0	0	0
1	0	1	1
1	1	0	1
1	1	1	1

Which digital circuit represents it?

A)

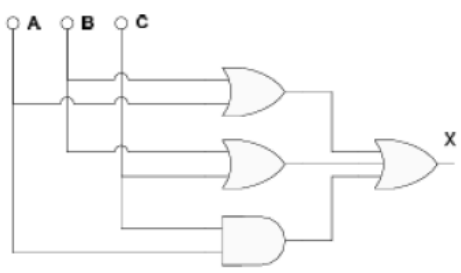

B)

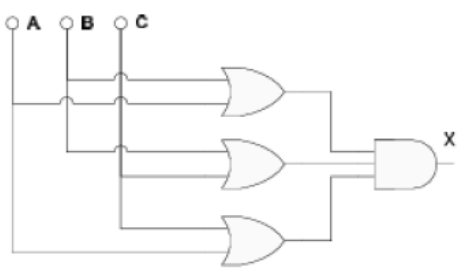

C)

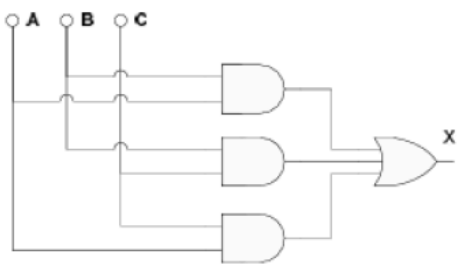

D)

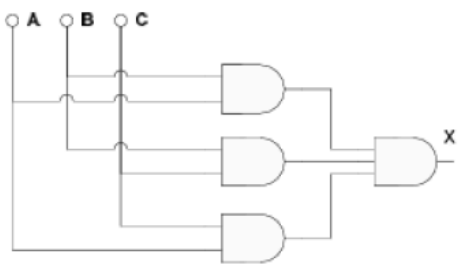

Your Answer: | Correct Answer: C | Not Attempted | Time taken: 00min 00sec | Discuss

Q #12 Multiple Choice Type | Award: 2 | Penalty: 0.67 | Digital Logic

Consider the following logic circuit, in which the connection points between the lines are highlighted by small black circles.

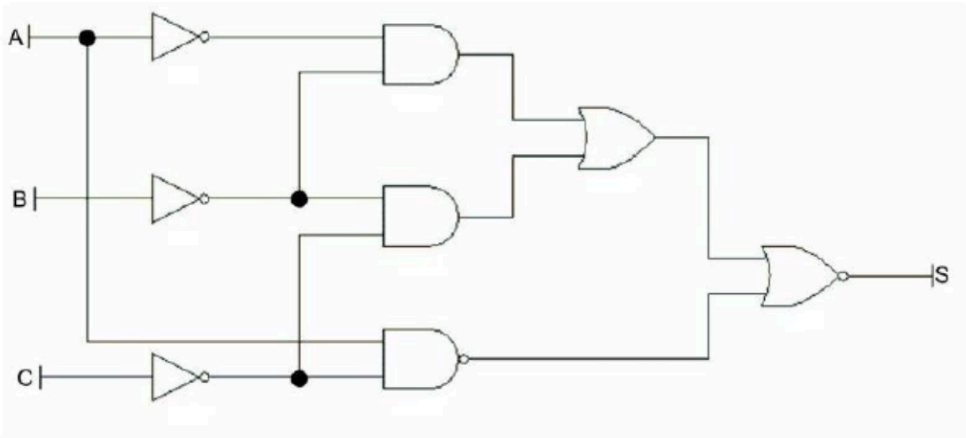

Select the alternative that correctly presents the minimized Boolean expression for output S.

A. $S = A\overline{BC}$

B. $S = A + B\bar{C}$

C. $S = AB + \bar{C}$

D. $S = AB\bar{C}$

Your Answer: | Correct Answer: D | Not Attempted | Time taken: 00min 00sec | Discuss

Q #13 Multiple Select Type | Award: 2 | Penalty: 0 | Digital Logic

Knowing that the connection points between the lines are highlighted in bold, consider the circuits logic below.

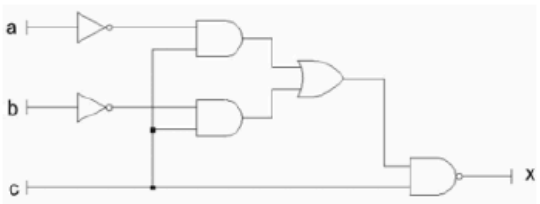

I.

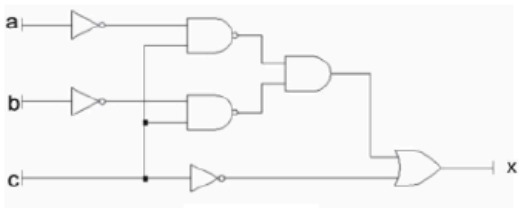

II.

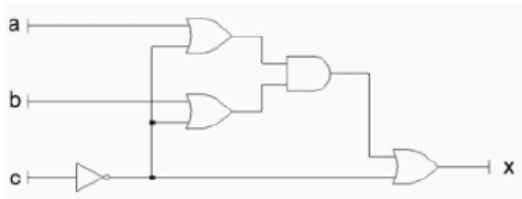

III.

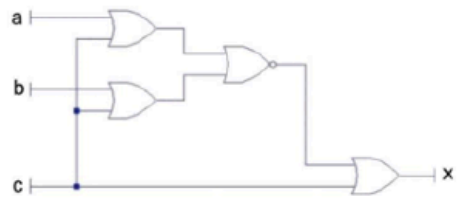

IV.

Select the correct alternative.

A. circuits I and II provide the same logical output.

B. circuits I and IV provide the same logical output.

C. circuits III and IV provide the same logical output.

D. circuits I, II, and III provide the same logical output.

Your Answer: | Correct Answer: A;D | Not Attempted | Time taken: 00min 00sec | Discuss

Q #14 Multiple Choice Type | Award: 2 | Penalty: 0.67 | Digital Logic

The following figure shows an asynchronous counter acting as a frequency divider, whose clock frequency $(f_{(CLK)})$ is 60 Hz.

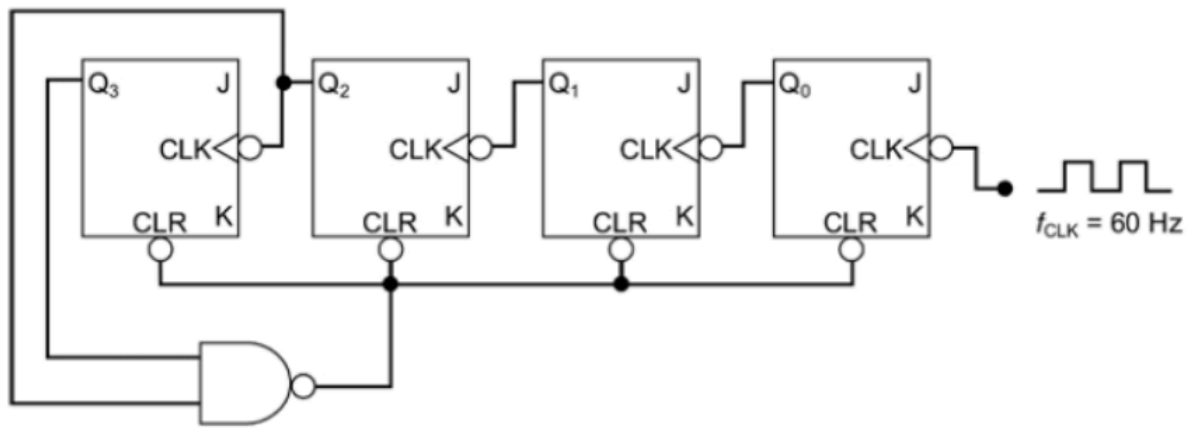

Considering that the J and K inputs of all flip-flops are permanently at a high logic level, the frequency of the signal at output $\mathbf{Q}_3$ will be

A. 5 Hz

B. 6 Hz

C. 12 Hz

D. 15 Hz

Your Answer: | Correct Answer: A | Not Attempted | Time taken: 00min 00sec | Discuss

Q #15 Multiple Choice Type | Award: 2 | Penalty: 0.67 | Digital Logic

Observe the logic circuit diagram and its respective truth table below.

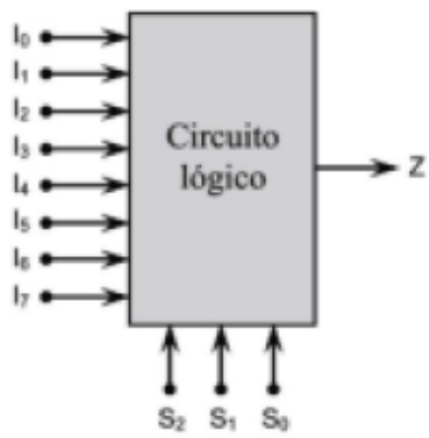

S_2	S_1	S_0	Z
0	0	0	I_0
0	0	1	I_1
0	1	0	I_2
0	1	1	I_3
1	0	0	I_4
1	0	1	I_5
1	1	0	I_6
1	1	1	I_7

Based on this diagram and truth table, it is correct to say that this is a logic circuit

A. encoder.

B. comparator.

C. demultiplexer.

D. multiplexer.

Your Answer: | Correct Answer: D | Not Attempted | Time taken: 00min 00sec | Discuss

Q #16 | Numerical Type | Award: 2 | Penalty: 0 | Digital Logic

The hexadecimal number BEEF in base 2 is:

Your Answer: | Correct Answer: 1011111011101111 | Not Attempted | Time taken: 00min 00sec | Discuss

Q #17 | Multiple Choice Type | Award: 2 | Penalty: 0.67 | Digital Logic

Let X and Y be two 4-bit signed integers represented in $\mathbf{2}$'s complement form. $X = 1011$ and $Y = 1100$. We compute $Z = X - Y$.
Which of the following statements is TRUE regarding the result Z ?

A. The result Z in 2's complement is 1111 and no overflow occurred.

B. The result Z in 2's complement is 0111 and an overflow occurred.

C. The result Z in 2's complement is 1111 and an overflow occurred.

D. The result Z in 2's complement is 1001 and no overflow occurred.

Your Answer: | Correct Answer: A | Not Attempted | Time taken: 00min 02sec | Discuss

Q #18 | Numerical Type | Award: 2 | Penalty: 0 | Digital Logic

A positive edge-triggered D flip-flop has a setup time (t_{su}) of 4 ns and a hold time (t_h) of 2 ns. The propagation delay of the flip-flop (t_{pd}) is 5 ns. This flip-flop is used to build a circuit where the output Q is fed back to the input D through an XOR gate that has a delay of 3 ns. What is the maximum clock frequency (in MHz) at which this circuit can operate reliably? (Give answer in integer)

Your Answer: | Correct Answer: 83:84 | Not Attempted | Time taken: 00min 00sec | Discuss

Q #19 | Numerical Type | Award: 2 | Penalty: 0 | Digital Logic

A signed fixed-point number is represented in 2's complement form using 10 bits, where 4 bits are used for the fractional part. The stored bit pattern is $1101\ 0110\ 10$. Find the decimal value of this number.

Your Answer: | Correct Answer: -10.375 | Not Attempted | Time taken: 00min 00sec | Discuss

Q #20 | Numerical Type | Award: 2 | Penalty: 0 | Digital Logic

A 4-bit binary number $X = x_3x_2x_1x_0$ represents a decimal digit in BCD.
This BCD number is converted to Excess-$\mathbf{3}$ code, and then the resulting Excess- $\mathbf{3}$ code is interpreted as an unsigned binary number Y.
If

$$Y = 2X + 3$$

find the value of the decimal digit represented by X.

Your Answer: | Correct Answer: 0 | Not Attempted | Time taken: 00min 00sec | Discuss

Q #21 Multiple Choice Type | Award: 2 | Penalty: 0.67 | Digital Logic

Consider the function $F(A, B, C, D) = \sum m(0, 1, 2, 5, 8, 9, 10)$. Which of the following represents the correct minimal SOP form?

A. $\bar{B}\bar{D} + \bar{B}\bar{C} + \bar{A}\bar{C}D$

B. $\bar{B}\bar{D} + \bar{A}\bar{C}D + \bar{C}\bar{D}$

C. $\bar{B}\bar{D} + \bar{B}\bar{C} + \bar{A}CD$

D. $\bar{B}\bar{D} + \bar{B}C + \bar{A}\bar{C}D$

Your Answer: | Correct Answer: A | Not Attempted | Time taken: 00min 00sec | Discuss

Q #22 Multiple Select Type | Award: 2 | Penalty: 0 | Digital Logic

A 3-bit synchronous up-counter is built using T flip-flops. Let the states be $Q_2Q_1Q_0$. Which of the following statements is/are CORRECT?

A. The excitation equation for T_1 is Q_0.

B. The excitation equation for T_2 is $Q_1 \cdot Q_0$.

C. If the clock frequency is 12 MHz, the frequency of the MSB (Q_2) is 1.5 MHz.

D. This counter requires a total of 8 states to complete one cycle.

Your Answer: | Correct Answer: A;B;C;D | Not Attempted | Time taken: 00min 00sec | Discuss

Q #23 Multiple Select Type | Award: 2 | Penalty: 0 | Digital Logic

Consider a circuit consisting of three 2-input XOR gates. The inputs to the first gate are A and B. The output of the first gate and a third input C are fed into the second XOR gate. The output of the second gate and a fourth input D are fed into the third XOR gate.
Which of the following input combinations will result in an output of 1?

A. $A = 1,\ B = 1,\ C = 1,\ D = 1$

B. $A = 1,\ B = 0,\ C = 1,\ D = 0$

C. $A = 0,\ B = 1,\ C = 1,\ D = 1$

D. $A = 1,\ B = 1,\ C = 1,\ D = 0$

Your Answer: | Correct Answer: C;D | Not Attempted | Time taken: 00min 00sec | Discuss

Q #24 | Multiple Select Type | Award: 2 | Penalty: 0 | Digital Logic

A 4-bit Universal Shift Register is loaded with the binary value 1011 (where Q_3 is the MSB and Q_0 is the LSB). The register is configured to perform a Circular Right Shift. Which of the following statements is/are CORRECT?

A. After 1 clock pulse, the content is 1101.

B. After 4 clock pulses, the content is 1011.

C. After 2 clock pulses, the MSB (Q_3) is 0.

D. This operation is equivalent to a Right Arithmetic Shift if the MSB was 1.

Your Answer: | Correct Answer: A;B | Not Attempted | Time taken: 00min 00sec | Discuss

Q #25 | Numerical Type | Award: 2 | Penalty: 0 | Digital Logic

In a particular number system,

$$(23)_r + (45)_r = (101)_r$$

What is the decimal value of the radix r ?

Your Answer: | Correct Answer: 7 | Not Attempted | Time taken: 00min 00sec | Discuss

Copyright & Stuff